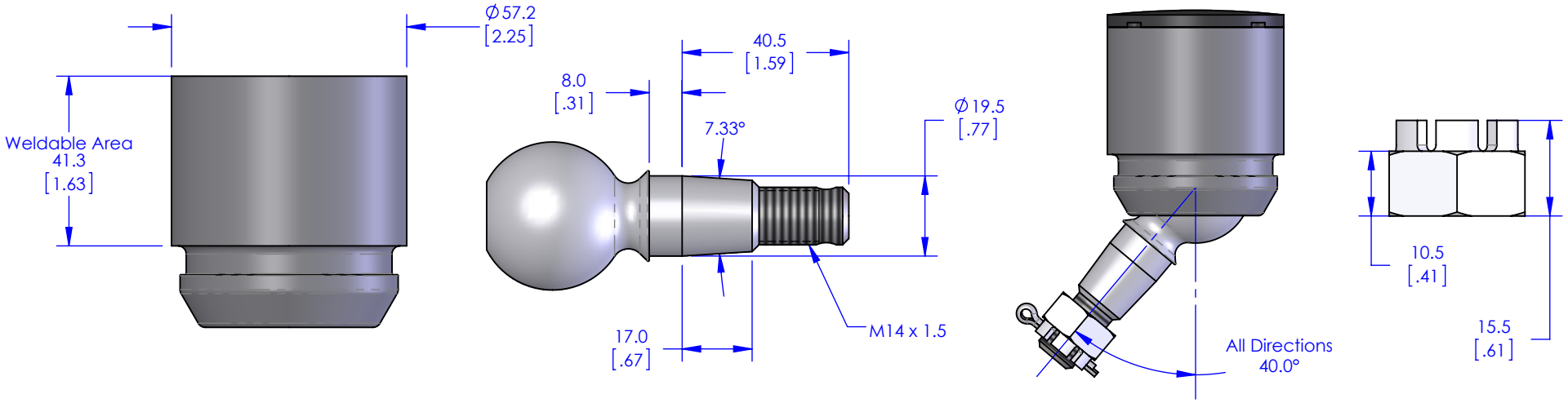

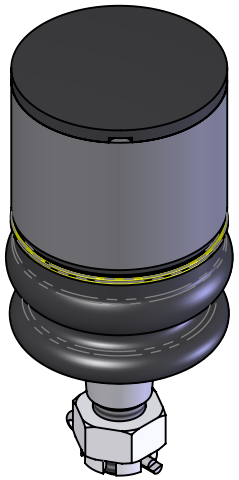

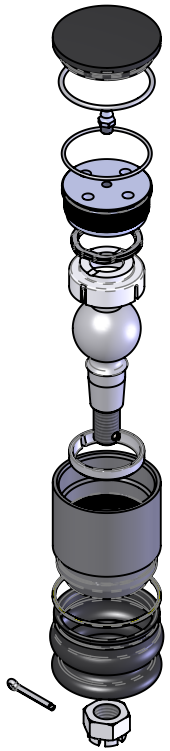

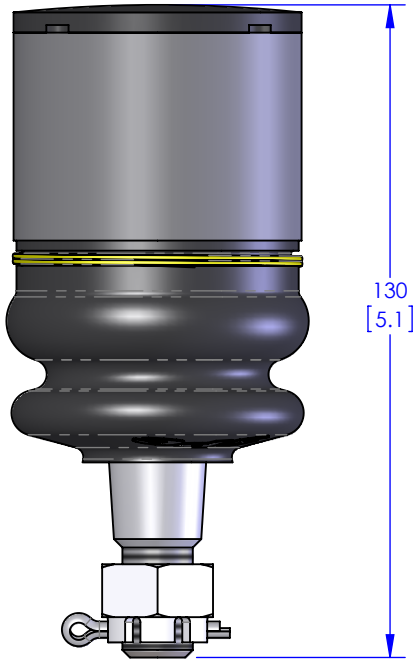

Specialty Products Company®
Longmont, Colorado USA • www.specprod.com

LINEAR mm[in]	ANGLE (deg.)
None±1.00 [.X ±.040"]	None± 2.0°
.X ±0.50 [.XX ±.020"]	.X ± 1.0°
.XX ±0.25 [.XXX±.010"]	.XX ± 0.5°

CONFORMS TO ASME Y14.5

15216 Weld-In Ball Joint, 7.33° Taper